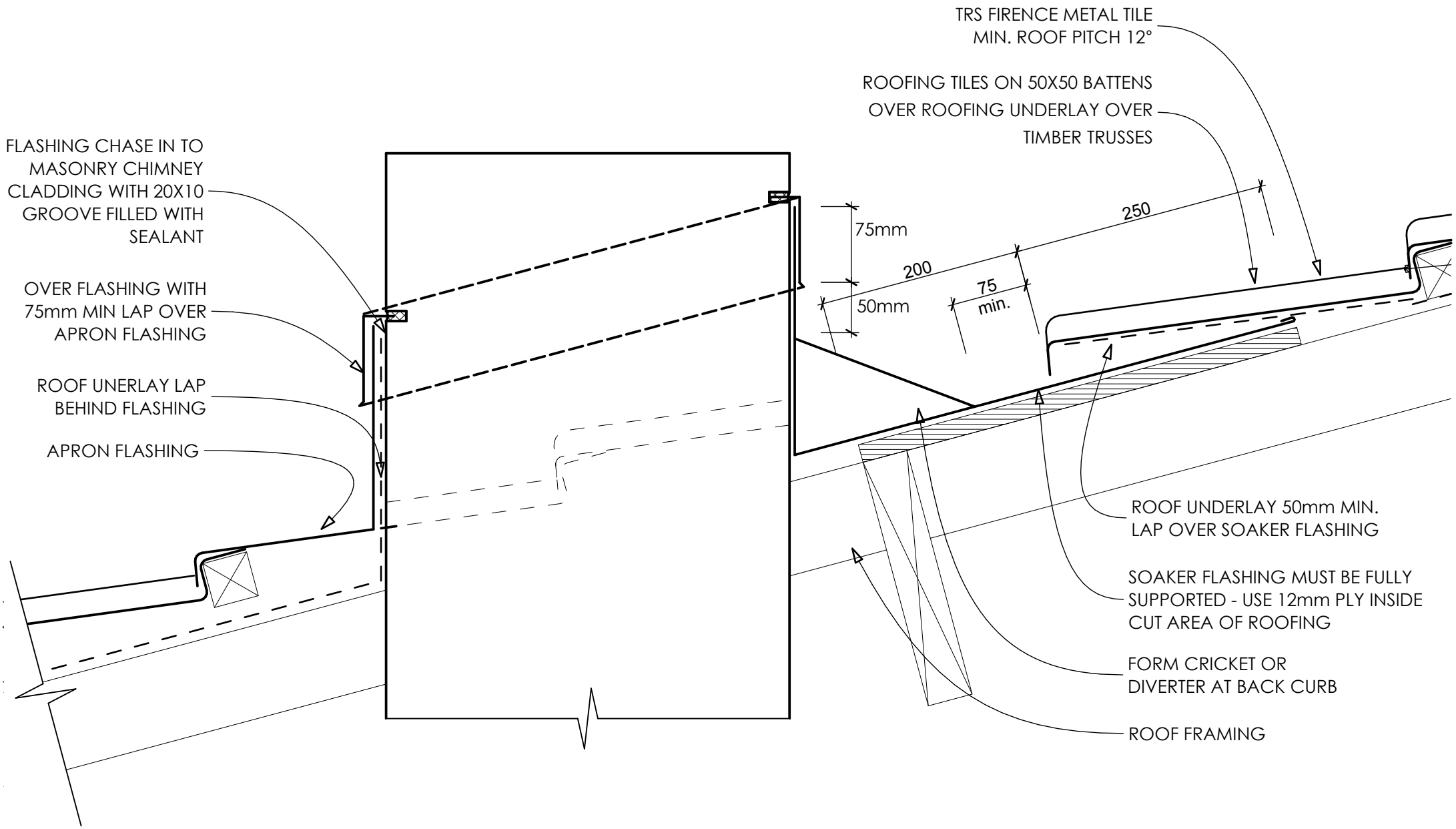

The Roofing Store

P: HEAD OFFICE 09 277 2717
ALBANY 09 972 0060
KATIKAIT 07 549 5190
WELLINGTON 04 974 5792
CHRISTCHURCH 03 348 6528

WEB: www.theroofingstore.co.nz
Copyright © The Roofing Store 2013

DETAIL NUMBER: T-TRSF-13 SCALE: 1:5

TITLE: CHIMNEY SIDE VIEW DETAIL